WildType

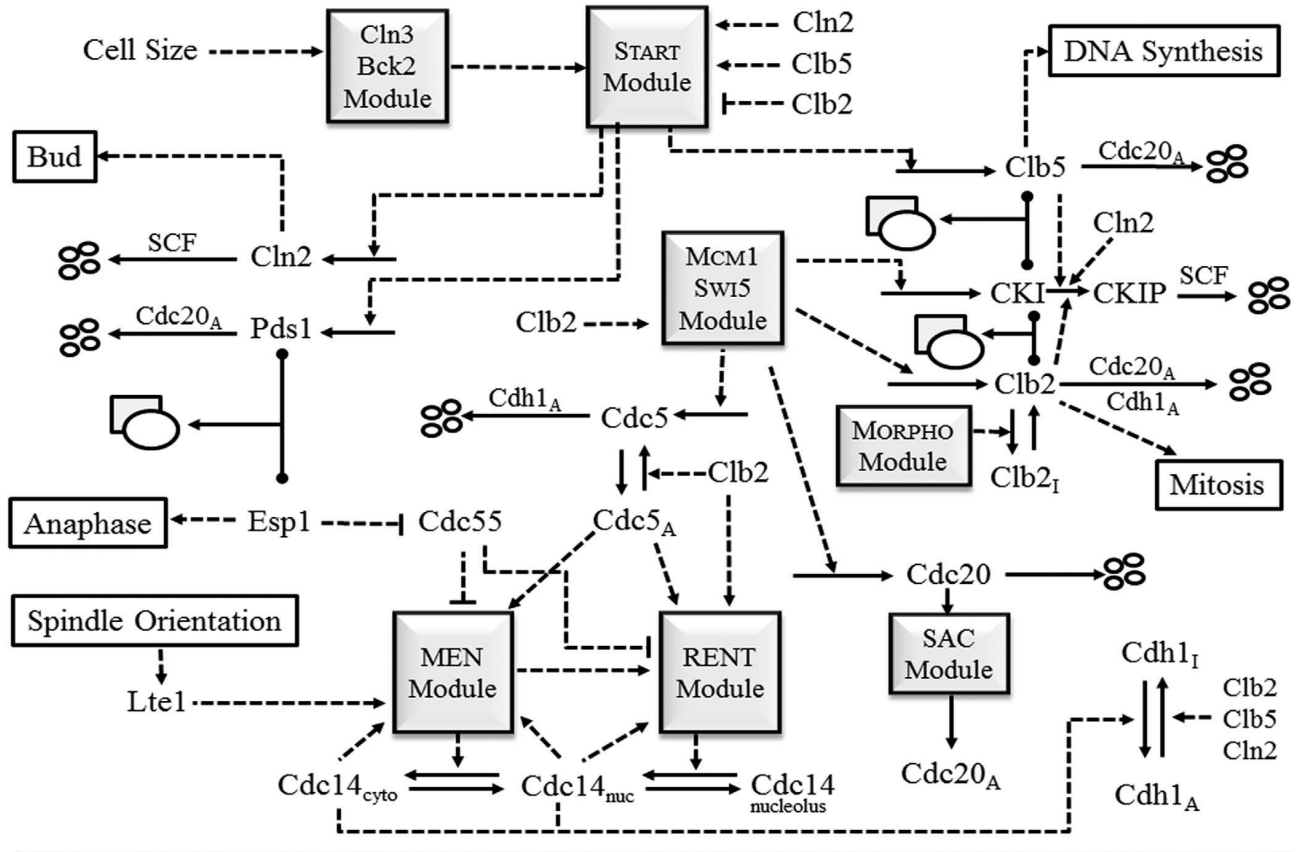
Cell Size
Cln3
Bck2
Module
START
Module
Cln2
Clb5
Clb2
DNA Synthesis
Bud
Clb5
Cdc20A
Cln2
SCF
Cln2
MCM1
SWI5
Module
CKI
CKIP
SCF
Cdc20A
Pds1
Clb2
Clb2
Cdc20A
Cdh1A
Cdh1A
Cdc5
MORPHO
Module
Clb2I
Mitosis
Clb2
Anaphase
Esp1
Cdc55
Cdc5A
Cdc20
Spindle Orientation
MEN
Module
RENT
Module
SAC
Module
Cdh1I
Lte1
Clb2
Clb5
Cln2
Cdc14cyto
Cdc14nuc
Cdc14
nucleolus
Cdc20A
Cdh1A