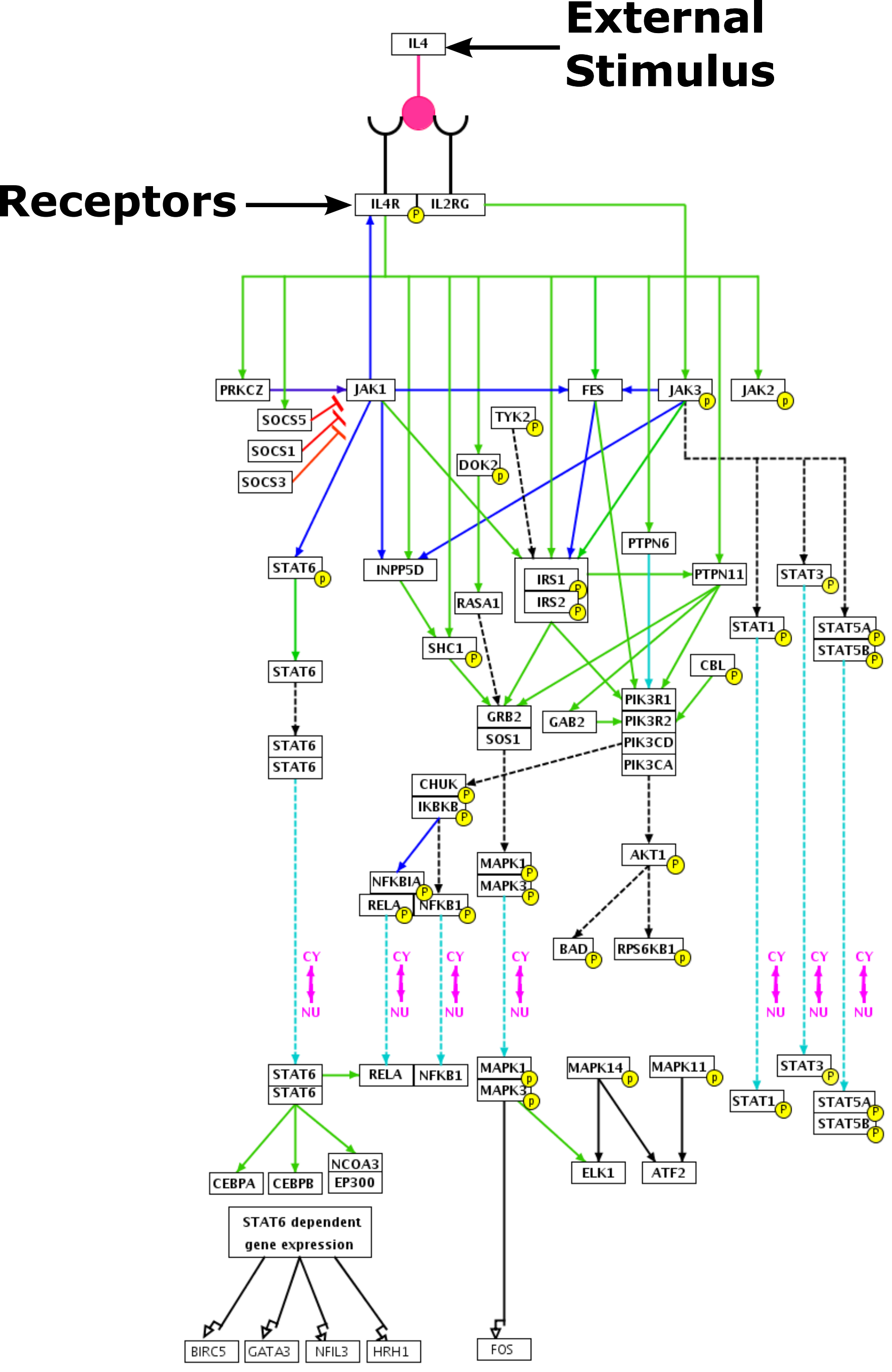
External Stimulus
IL4
Receptors
IL4R
IL2RG
PRKCZ
JAK1
FES
JAK3
JAK2
SOCS5
SOCS1
SOCS3
TYK2
DOK2
PTPN6
STAT6
INPP5D
IRS1
IRS2
PTPN11
STAT3
RASA1
STAT1
STAT5A
STAT5B
SHC1
CBL
STAT6
PIK3R1
PIK3R2
PIK3CD
PIK3CA
GRB2
SOS1
GAB2
STAT6
STAT6
CHUK
IKBKB
AKT1
MAPK1
MAPK3
NFKBIA
RELA
NFKB1
BAD
RPS6KB1
CY
NU
STAT6
STAT6
RELA
NFKB1
MAPK1
MAPK3
MAPK14
MAPK11
STAT3
STAT1
STAT5A
STAT5B
CEBPA
CEBPB
NCOA3
EP300
ELK1
ATF2
STAT6 dependent gene expression
BIRC5
GATA3
NFIL3
HRH1
FOS