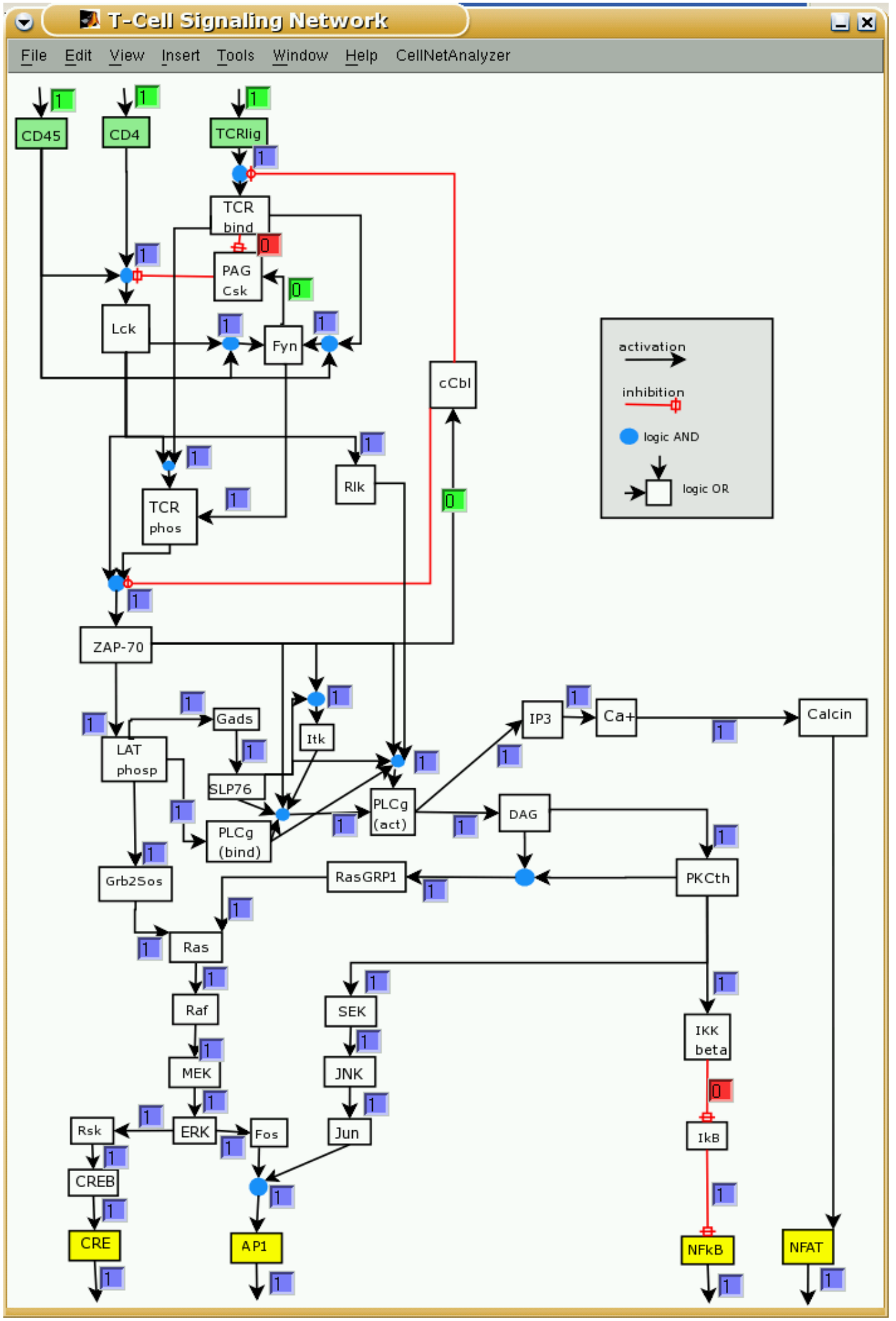
T-Cell Signaling Network
File
Edit
View
Insert
Tools
Window
Help
CellNetAnalyzer
CD45
CD4
TCRlig
TCR bind
PAG Csk
Lck
Fyn
cCbl
Rlk
TCR phos
ZAP-70
Gads
Itk
LAT phosp
SLP76
PLCg (bind)
PLCg (act)
IP3
Ca+
Calcin
DAG
PKCth
Grb2Sos
RasGRP1
Ras
Raf
MEK
ERK
Rsk
CREB
CRE
Fos
AP1
SEK
JNK
Jun
IKK beta
IkB
NFkB
NFAT
activation
inhibition
logic AND
logic OR