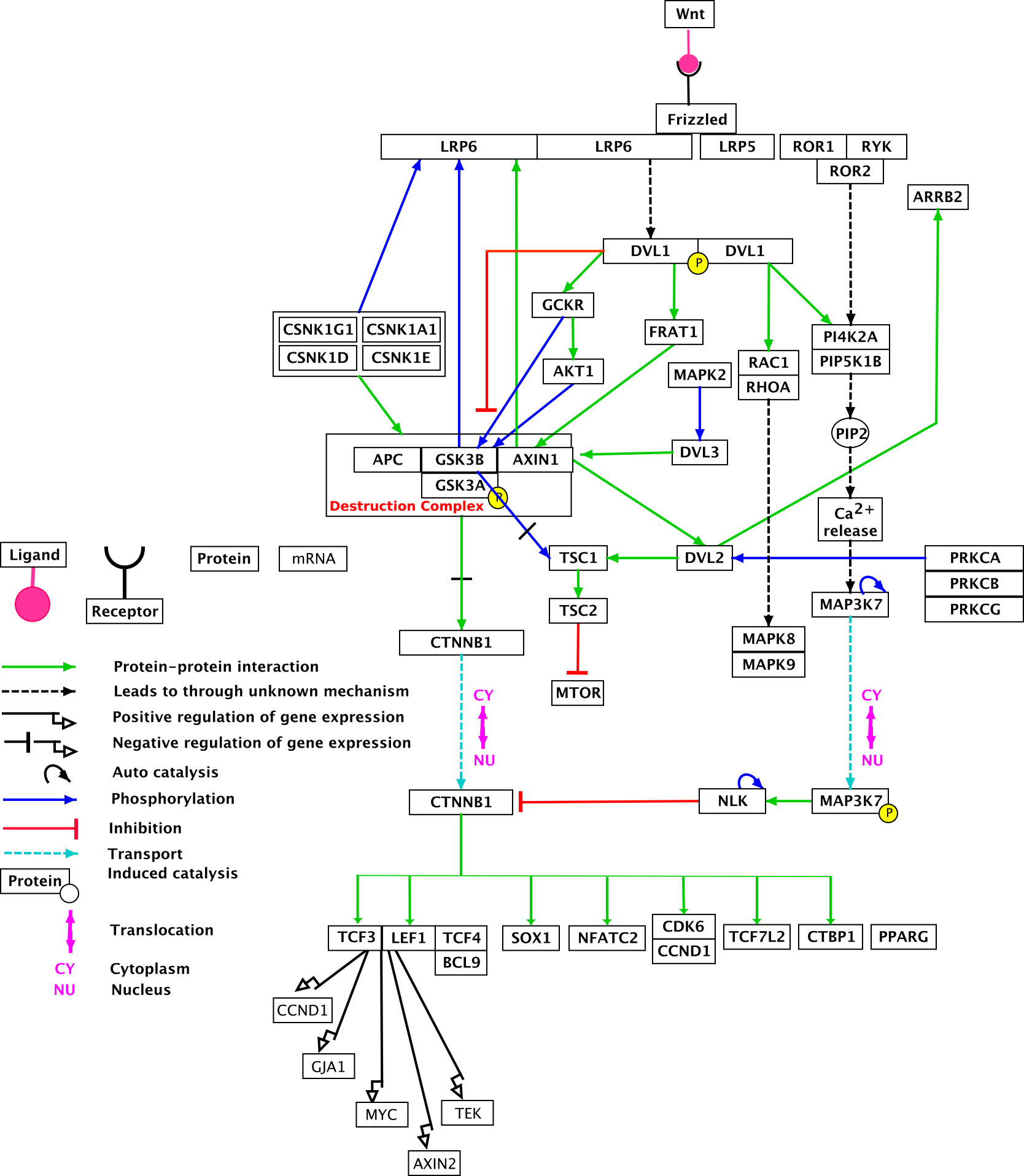
Wnt
Frizzled
LRP6
LRP6
LRP5
ROR1
RYK
ROR2
ARRB2
DVL1
P
DVL1
GCKR
FRAT1
PI4K2A
PIP5K1B
CSNK1G1
CSNK1A1
CSNK1D
CSNK1E
AKT1
MAPK2
RAC1
RHOA
PIP2
APC
GSK3B
AXIN1
GSK3A
P
Destruction Complex
DVL3
Ca2+ release
Ligand
Receptor
Protein
mRNA
TSC1
DVL2
PRKCA
PRKCB
PRKCG
TSC2
MAP3K7
CTNNB1
MAPK8
MAPK9
MTOR
CY
NU
CY
NU
CTNNB1
NLK
MAP3K7
P
TCF3
LEF1
TCF4
BCL9
SOX1
NFATC2
CDK6
CCND1
TCF7L2
CTBP1
PPARG
CCND1
GJA1
MYC
TEK
AXIN2
Protein-protein interaction
Leads to through unknown mechanism
Positive regulation of gene expression
Negative regulation of gene expression
Auto catalysis
Phosphorylation
Inhibition
Transport
Induced catalysis
Protein
Translocation
CY
Cytoplasm
NU
Nucleus